VHFER

50 MC. AND UP

LEARN BY DOING

Volume 4, No. 2 February, 1966

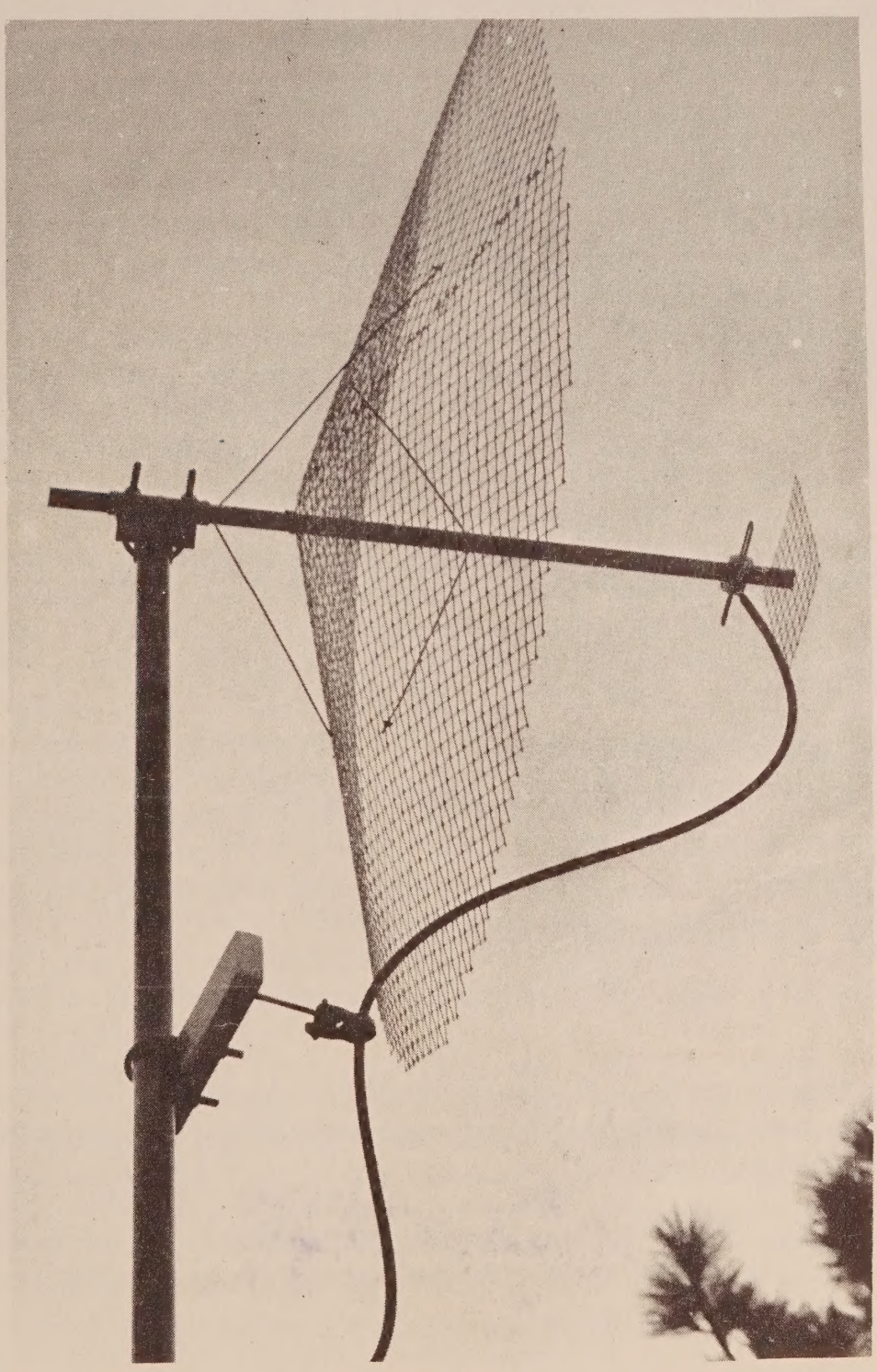

CONICAL REFLECTORS

A 432 DX MAN'S CONVERTER

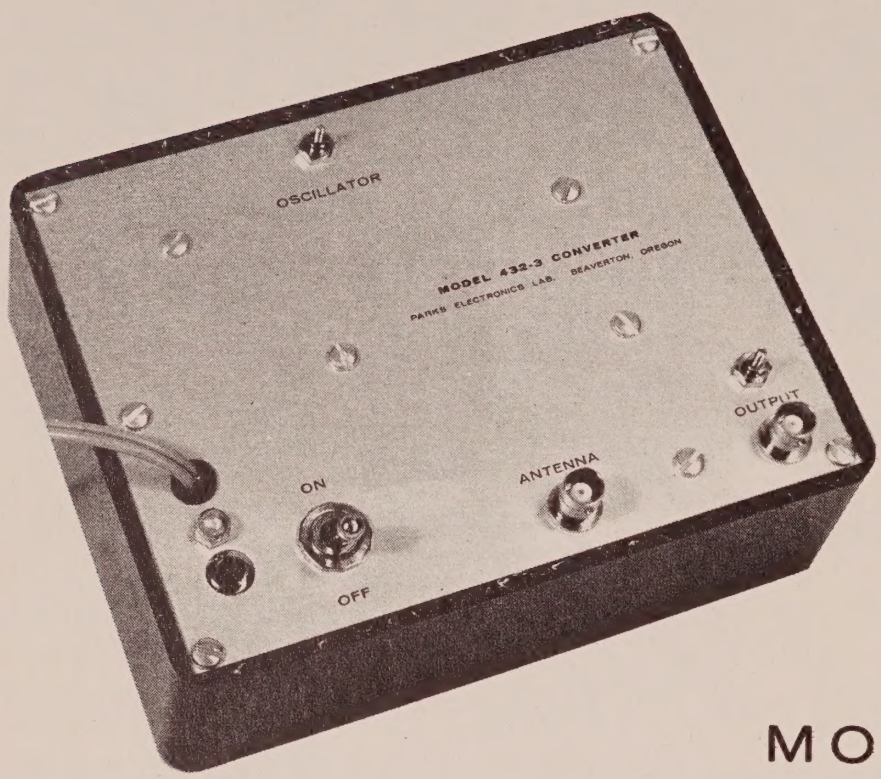

MODEL 432-3
$49.95 POSTPAID

INTRODUCING: The new PARKS 432 MC. CONVERTER, Model 432-3.

NEW FEATURES:

--All solid-state design
--Zener-regulated a.c. power supply
--Extremely low-noise front end-- 4 d.b. or less.
--High image and I. F. leak-through rejection
--Excellent frequency stability.

This converter uses the Texas Instruments TI-XMO5 transistor. From our tests it is superior in performance to the 2N3399 and costs much less--less expensive to replace if you damage it with r.f.

ORDERING INFORMATION: Price is $49.95, postpaid. Add 35¢ for Special Handling, a fee charged by the post office for faster delivery. Add $2.50 for Air Mail.

I. F. Ranges available put 432 Mc. at 26, 27, 28.1, 29, 30.5, 49 or 50 Mc.

Type BNC connectors only.

PARKS ELECTRONICS LAB.

ROUTE 2 BOX 35 BEAVERTON, OREGON

ODDS & ENDS
by K7AAD

This page is for the misc. things I think you might be interested in knowing about.

OSCAR IV is still sending out its beacon signal and apparently the translator can be activated though nothing intelligible comes out of it. Plans are being made to get another one going. Getting the solar cells seems to be the main problem. I have no further news of launches coming up.

Two-meter moonbounce activity is picking up. The Stanford group has 3 skeds with VK3ATN on 144.090. They are using the 60 foot dish. The VK has a rhombic aimed 5 degrees above the horizon so only certain times can be used. The first test, Feb. 27, was unsuccessful. The Stanford station was off frequency a bit. W6DNG reported listening for both stations and hearing nothing, though he was able to hear his own echoes. Bill says he has been heard in Australia. Locally there is more 2 meter moonbounce interest. I'm thinking it might be easier on 2 than 432. At least we know it can be done with all home-built equipment and no big dishes. W6DNG lives in a very closely-packed residential area. His array of 8 7-element yagis cranks up a ways above his roof.

On 432 we've had our problems. Slow delivery being the main one and my apologies to those of you having to wait. Our amateur and medical business has severe ups and downs. When they're in phase in either direction we are really in a stew. We've been working on the new 432 converter shown in the inside front cover. Incidentally, this is the first ad we've had in 3 months in our own mag. Fred Brown, W6HPH, designed this converter. It uses the Texas Instruments TI XMO5 in the r.f. and mixer section. We've dropped the Amperex 2N3399. It has been a good one but progress marches on. The T.I. transistor is about 35¢ in hundred lots while the 2N3399 is $1.70. And the T.I. works measureably better, consistently. W3SDZ called the other day wondering if maybe they got a hot batch back at Bell Labs. because the noise figure they were getting was only 1 db worse than the paramps at 432. Not SDZ"s paramp--Bell Labs' paramp. Well, I won't say how good they are because we can't measure that well and be more than relative. I won't say that it is better than the 2N3478 (selected). I will say you can't beat it considering price and performance. Obtaining them is a bit of a problem. If you want a couple, send me a buck. T.I. has promised me delivery of another batch right away. These are PNP germaniums. They are not going to plug into anything you may have now and work right off. In some cases they will, most they won't. We are having to junk our preamps because I just can't tame them in that physical configuration. The difference in performance may not be discernible to the ear. But when you're pushing for the limit, every d.b. helps.

As for transistors on the other bands below 432, we are not yet convinced that is the way we should go. As a manufacturer we sell to all types --experienced and beginners. The tube has been around for a long time. It will take lots of punishment (such as r.f. leakage into the input) and keep plugging away. A transistor will go sour--all at once or slowly. And transistors have more cross-modulation problems. The field-effect types minimize that but they aren't yet priced low enough in the quantities we might purchase. I know of no good evidence yet you can hear more on two with a transistor than you can with a nuvistor. The noise figure characteristic of transistors is pretty flat in most of the VHF range, getting worse at 432 and above. So who wants 4 d.b. at 144 Mc. when you can get 3 with nuvistors? If it turns out you can do better with transistors, we'll go that route.

The yearly west coast VHF conference will be held May 14 and 15 at the Miramar Motor Hotel in Santa Barbara, Calif. This is an informal group of serious VHF men. They bring converters and antennas for measurement and comparison. Discussions are well above the beginner's level. Most who attend make their living at electronics. K6KV hosts.

CONICAL REFLECTORS

by Fred Brown, W6HPH *

It is no accident that high-gain, large-aperture antennas are predominately parabolic reflectors. In the region above about 20 db gain, the parabolic dish is suually the simplest and most economical solution to antenna design problems.

For the home constructor, though, it would be less than truthful to say that dishes are easy to make. One of the primary difficulties stems from the fact that a paraboloid is a doubly-curved surface. If constructed from flat sheets, part of the material must be stretched and/or part compressed to conform to the parabolic surface. Cylindrical parabolas of the type described a few years ago in QST are easy to construct, being singly-curved surfaces. But they require a relatively complicated line-source feed for illumination.

Actually, it's not at all necessary that the reflector be perfectly parabolic so long as the departure from a true parabola does not exceed a maximum value at any point on the surface. Most authorities set the limit at $\pm$ 1/16 wavelength. Reflector surfaces held to this tolerance show no significant deterioration of gain or pattern.

The 1/16 wavelength tolerance permits rather drastic changes in the shape of the reflector surface before antenna performance is affected. If the reflector is not too large, we can even substitute a simple singly-curved surface for the difficult-to-form doubly-curved surface of the paraboloid without losing any precious decibels.

About the simplest singly-curved surface useful for approximating a paraboloid is a shallow cone. Cones can be very easily fabricated from flat material simply by removing a sector from a disc and joining the two edges. By using enough concentric cones of varying diameter and apex angle, any paraboloid can be approximated to any arbitrary degree of accuracy. Mapmakers have been using this same polyconic projection technique for many years to approximate a sphere (the earth's surface) with concentric cones.

The optimum solution for conical reflectors has been worked out mathematically[1] and it turns out that surprisingly large reflectors can be built with a small number of cones without exceeding the 1/16 wavelength tolerance. For instance, the two-cone solution permits building reflectors up to a diameter of 13.86 wavelengths. That's 10 1/2 feet at 1296 Mc., or 31 1/2 feet at 432 Mc. This maximum size is worked out on the basis of a 120 degree feed angle, or an F to D ratio of .423, as this is a typical value (see Fig. 1.) If the focal length, F, is increased, the feed angle will be less, making possible a larger dish before the 1/16 wavelength tolerance is exceeded.

Figure 2 shows in cross-section how a parabolic surface can be closely approximated by two cones. The diameter to focal-length ratio has been greatly exaggerated for the purpose of illustration. The optimum solution shows that the smaller cone is exactly half the diameter of the larger and the same maximum error occurs at the 9 points shown.

*Assistant Editor, VHFER

[1]Brown, F.W. "Polyconic Approximation to a Parabolic Surface", PGAP Transactions, January, 1961, page 113.

VHFER magazine is published monthly by Parks Electronics Lab., Rt 2, Box 35, Beaverton, Ore. 97005. Subscription rates: U.S. & possessions $2 per year, others $3 per year. Second class postage paid at Beaverton, Oregon

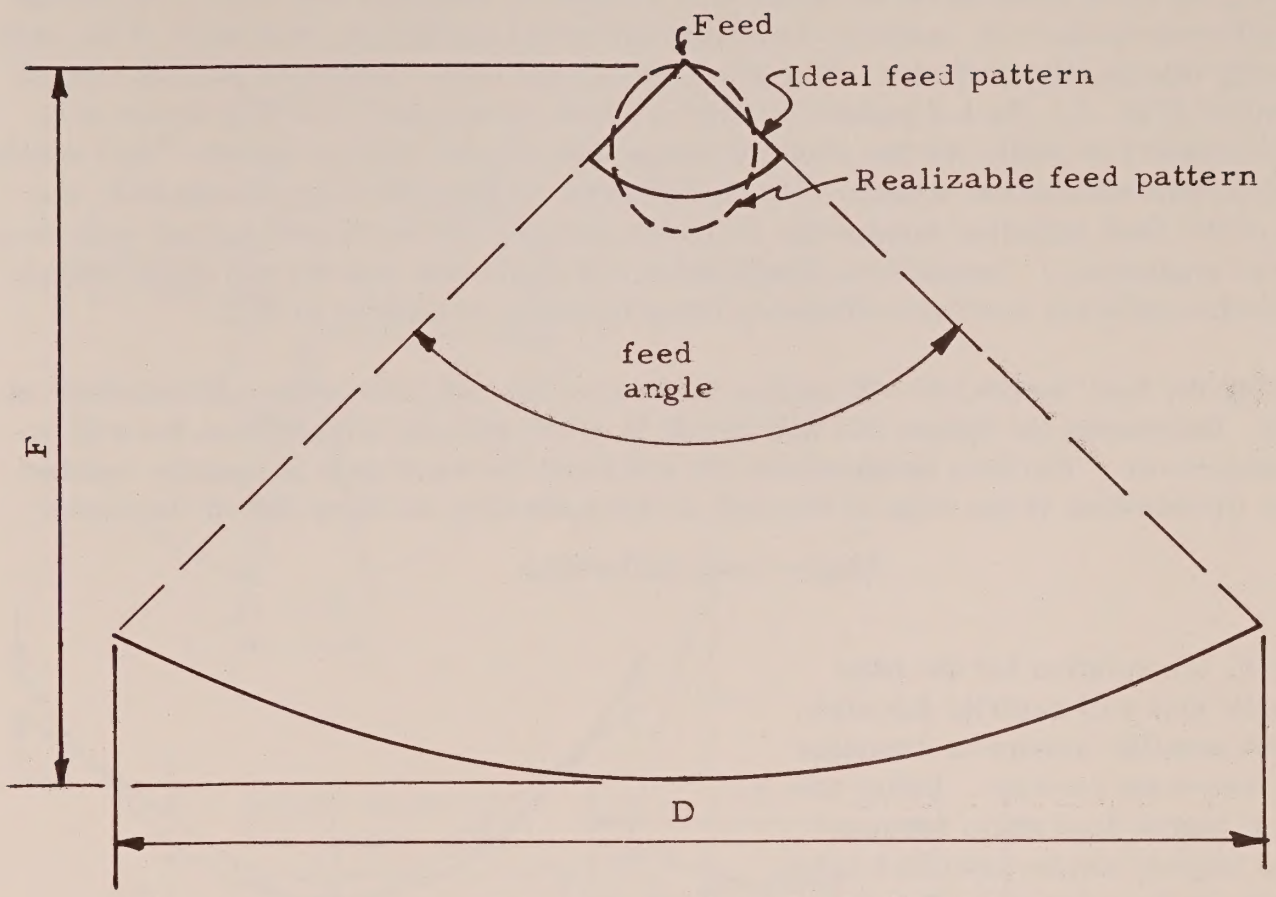

Fig. 1. Feed geometry for a parabolic reflector.

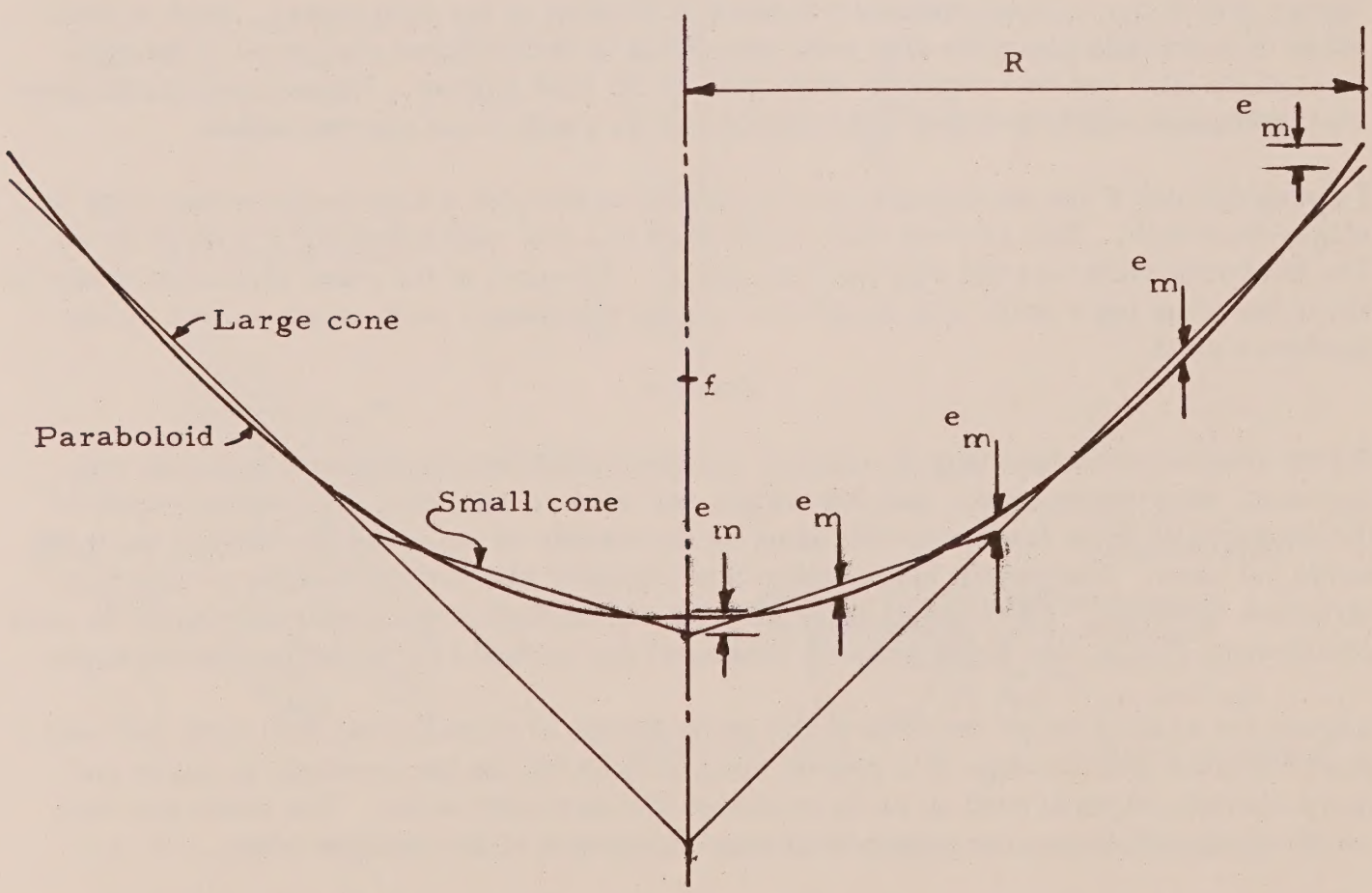

Fig. 2. Principle of the polyconic reflector.

Illumination

Maximum gain from a parabolic reflector type antenna is achieved only when illuminated with a uniformly-polarized, uniform-amplitude spherical wavefront, with none of the incident energy missing the reflector. The ideal feed would have a radiation pattern shaped like a sector (Fig. 1.) Such a pattern is impossible to synthesize, and in practice it is usually necessary to settle for the common-place lobe-shaped pattern shown. This easily-realized pattern suffers two defects: (1) the reflector is not uniformly illuminated, and (2) part of the feed radiation misses the reflector entirely and is wasted (called spill-over by antenna engineers.) Nonuniform illumination and spill-over are the two main reasons for parabolic reflector aperture efficiency being typically around 50 to 65%.

Decreasing the feed beamwidth will reduce spill-over but will also reduce illumination at the edge. Increasing the beamwidth will result in more uniform illumination but will increase spill-over. The best compromise for maximum forward gain is usually reached when the illumination at the edge of the dish is down about 10 db from that at the center.

Single-Cone Reflectors

Of course, the solution for the case of a single cone will restrict the size to a much smaller maximum diameter than the two-cone solution. Under the same 120 degree feed angle assumption, the largest single-cone dish turns out to have a diameter of 3.46 wavelengths. This is still large enough to give a very respectable gain. It's even possible to make a somewhat larger dish if the 1/16 wavelength tolerance is relaxed at the dish center. Such a relaxation is justifiable since the area near the vertex is insignificant compared to the total area of the dish and this region is shadowed by the feed anyway. Figure 3 shows the geometrical relationship between a paraboloid and its single-cone approximation.

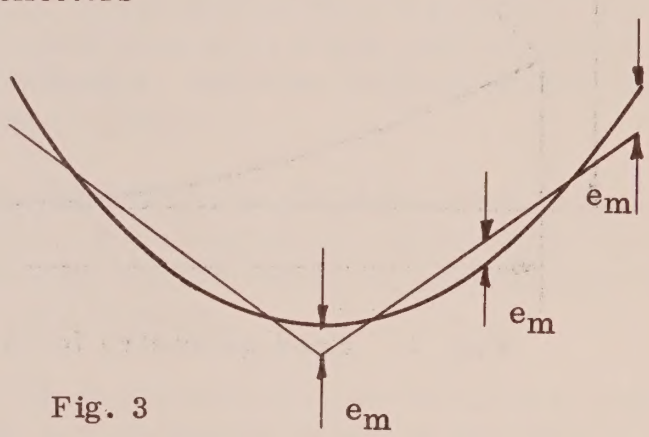

Fig. 3

Figures 4, 5 and 6 are photographs and construction data for a high-performance 1296 Mc. single-cone dish. This antenna was constructed in a few hours time for a cost of $1.50. The hardware cloth was the only part purchased. The cost of the sheet aluminum would be about the same but a solid dish would have a wind resistance many times as high as the hardware cloth.

Results

We've always maintained that an amateur antenna design should combine high gain with low-cost, easy construction, and low weight and wind resistance. The conical shown in the photographs goes farther toward meeting the totality of these objectives than anything we've yet seen. The gain is much higher than possible with a corner reflector and construction is easier. Theoretical gain[2] for a parabolic dish of equal diameter is 16 db over a half-wave dipole, and we've actually measured the conical at a somewhat higher figure.

Anyone not wishing to get involved in the mathematics of conicals can still work out very good solutions graphically. It's merely necessary to lay out the parabola on paper and move straight edges around so as to minimize the maximum error. The cones are then constructed with slopes corresponding to the inclination of the straight edges.

[2]The formula for power gain of a properly constructed parabolic dish over a half-wave dipole is $3.6\ D_\lambda^2$, where D_λ is the diameter in wavelengths.

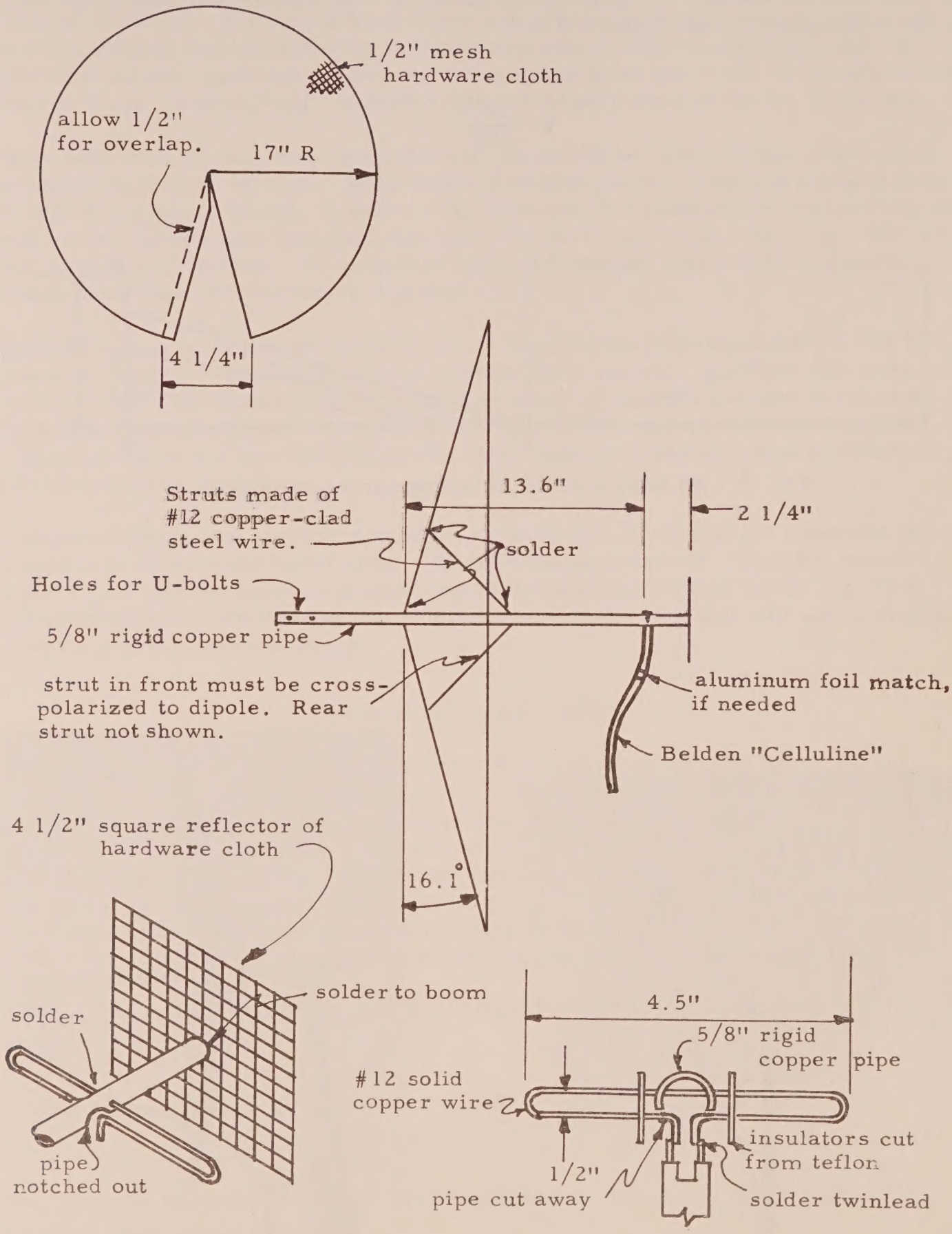

Fig. 6. Construction details for the 1296 MC conical reflector antenna

Fig. 7 show a very simple method of laying out a parabola. The rise, BC, and one-half the diameter, OB, are divided into the same number of equal parts. From the divisions on BC draw lines to O. From the divisions on OB draw perpendiculars. The intersections of these construction lines are points on the parabola. The relationship between the rise, h, the focal length, F, and diameter D is

$$h = \frac{D^2}{16F}$$

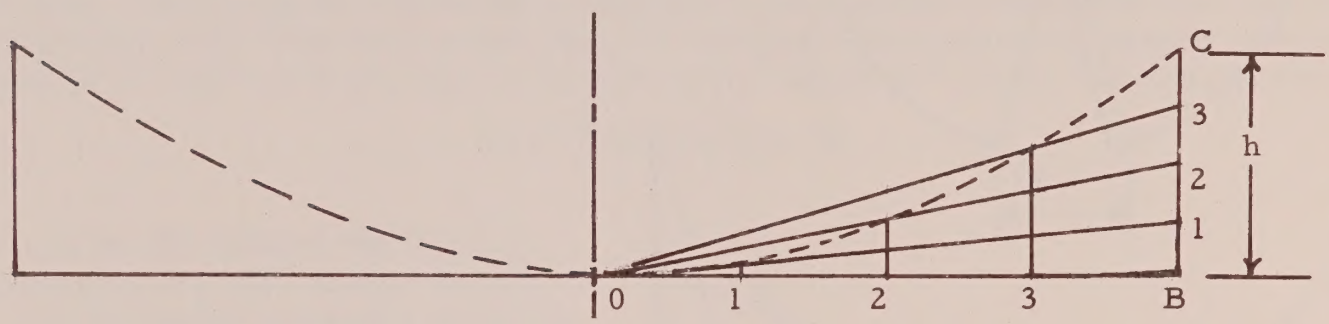

Fig. 7. An easy method of laying out a parabola.

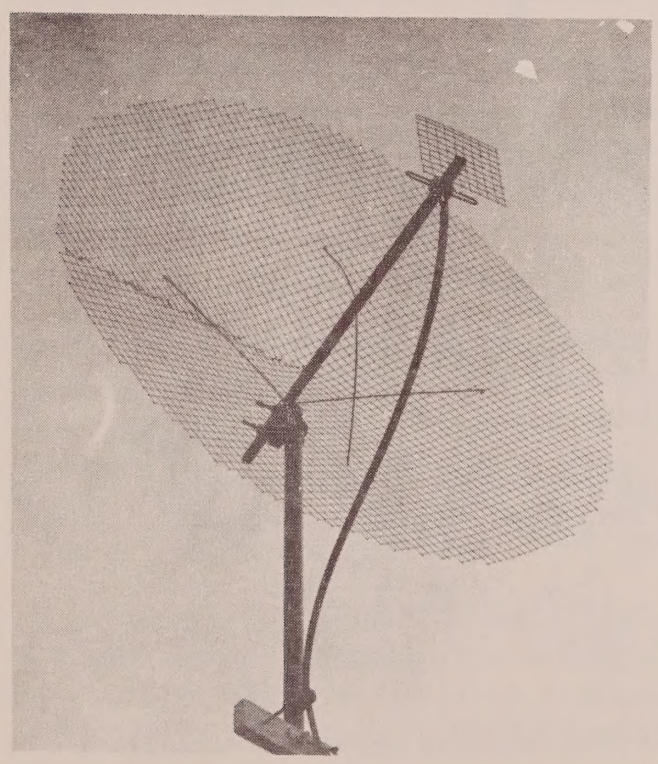

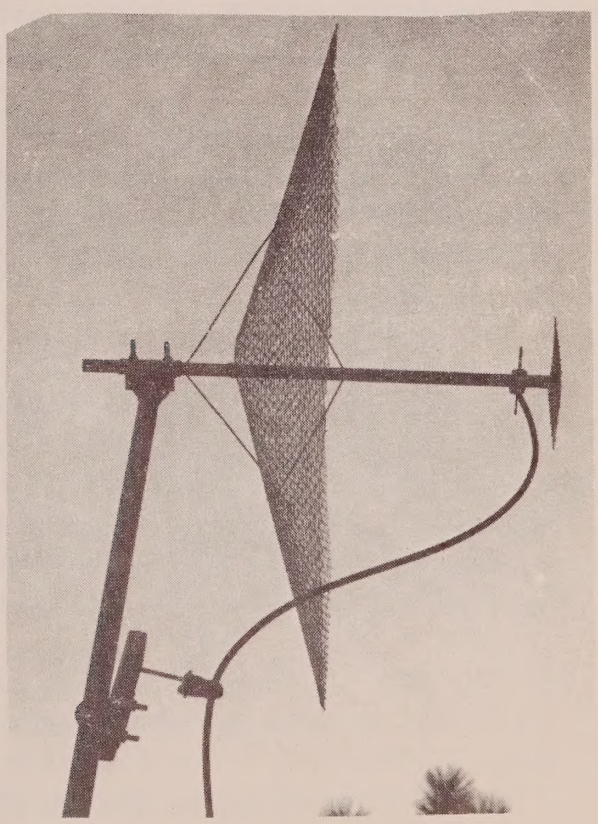

NOTES ON NOISE FIGURE MEASUREMENTS

by Fred Brown, W6HPH *

Noise figure indicates how much worse our receiver is than a theoretically perfect, noiseless receiver. The simple home-made type of noise generator used by most of us does not indicate absolute noise figure, but it does permit relative measurements. It tells when we have made things better or worse and by about how much. It permits comparison of our "pride-and-joy" converter with our friend's state-of-the art (?) designs.

There have been so many noise generator articles published I don't believe space should be wasted on another one here. Some words of caution though. If you use a silicon diode, be sure it is reverse biased. It makes a big difference.[1] I found this out the hard way myself. A few designs have been published where the diode was in the wrong way. The latest issue of QST had one. Not all silicon diodes will conduct appreciably or generate enough noise when reverse biased, but most will.

Most articles on noise generator technique say to adjust the diode current for a 3 db increase in receiver output noise and then read the diode current. It's faster and more convenient to leave the diode current at some fixed value and note the increase in receiver noise output when the generator is turned on. Silicon diode noise generators equipped with a push button are best for this service since there is no warm-up time as with the 5722 vacuum tube diodes.

With the constant-diode-current method the receiver gain is adjusted for a constant reference level on the noise output meter with the noise generator off. Then it's merely necessary to note the increase in meter reading when the button is pressed. Any front-end adjustment that will increase the difference between the "on" and "off" meter reading is an improvement in noise figure.

Comparison Measurements

It's usually of interest to know just how many db improvement in noise figure one preamplifier or converter is over another. Accurate measurement of this improvement can be made with an uncalibrated noise generator by observing the increase in noise output caused by the generator. Here is the procedure: (1) With converter #1 connected, set the receiver gain so the noise output meter reads some convenient reference level. Call this voltage E. Turn on the noise generator and take a reading. This voltage is E_1. (2) Connect converter #2 and adjust the receiver gain for the SAME reference reading, E, with the generator off. Turn the generator on and read the output meter. That's E_2.

(3) The relation between E_1, E_2, and E; and the difference in noise figure between the two converters in db is:

$$\text{difference in N.F.} = 10 \log \frac{E_2^2 - E^2}{E_1^2 - E^2} \quad \text{db}$$

The converter that gives the larger difference between OFF and ON meter readings has the lower noise figure, of course.

[1]See WØIPE's article in October '65 VHFER, page 8.

*Assistant Editor, VHFER.

Audio Detector

The above formula assumes linear amplification and frequency conversion between the converter and voltmeter. This will usually be the case if the voltmeter is reading the I.F. voltage directly or audio noise voltage with the B.F.O. turned on. The r.f. gain on the receiver must be set well below the level of saturation of the last I.F. stage or detector. It must not be set so low that receiver noise is not sufficiently "covered" by the noise output from the converter.

The random nature of noise makes it hard to measure with conventional instruments because of "meter flicker." The audio detector and integrating circuit below will wipe out nearly all the flicker and make possible precise measurements. It was originally described by KØ DJP in the Oct. '58 issue of QST and is also in the ARRL VHF manual. The version below uses full-wave rectification which results in somewhat smoother d.c. The integrating circuit has a time constant of 1 second---longer than all but the most highly damped meter movements. Our checks on the linearity of the detector shows it to be very good for output levels above about 1 volt d.c.

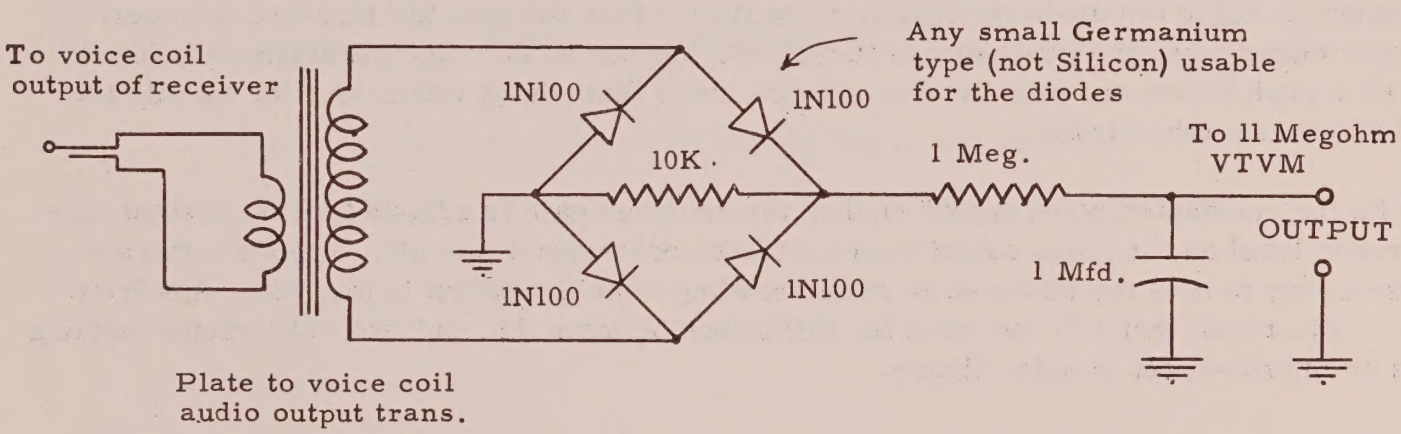

THE OSCAR TRACKER

by Howard F. Shepherd Jr., W6QJW*

Ed. Note: The picture below and the text that follows were sent to me & I thot a number of you might be interested in seeing a W6-style antenna for VHF. LP

The four moon bouncers are fed in phase to allow for vertical, horizontal or circular polarization on 144 Mc. At present they are fed by open-wire line to coaxial baluns, and then 50-ohm coax. The helix has 18 turns, as shown in the picture. I have been experimenting with the tuning and hence one full turn is missing. The design of the helix is along the line suggested by WB6IOM. It consists of a lightweight bamboo structure held together with fiberglass tape and epoxy joints. The helix is also attached with fiberglass tape.

The power hinge is operated by a standard wing-flap actuator which provides the whole assembly with rotation through 90 degrees from horizontal to vertical. The azimuth rotation is provided through the pipe extending down the mast from a prop-pitch gear train, which in turn is actuated by a 1/15 h.p. Bodine variable-speed d.c. motor. This permits very fine adjustment and also allows approximation of tracking rates so as to keep the antenna moving on the satellite for relatively long periods of time before the narrow beamwidth of the antenna loses the signal.

An additional feature is the hinging of the tower in the center, which permits the structure to be tilted over to an equatorial angle for a possible moonbounce antenna system.

The center boom is a 3-inch diameter, 1/8-inch wall aluminum pipe. The beam supports are 1 5/8" aluminum pipe in the center section and 1 1/2" fir dowelling at the ends so as to minimize disruption of the pattern by the supports.

The helix has permitted reception of the OSCAR IV beacon well above the noise level at apogee when the antenna is set on the horizon (corresponding to a sub-satellite position in the South Pacific Ocean near Australia.) Signals through the translator have ranged up to S 7-8 when the perigee has been near the Hawaiian Islands. End.

127 S. Citrus Ave., Los Angeles, Calif. 90036

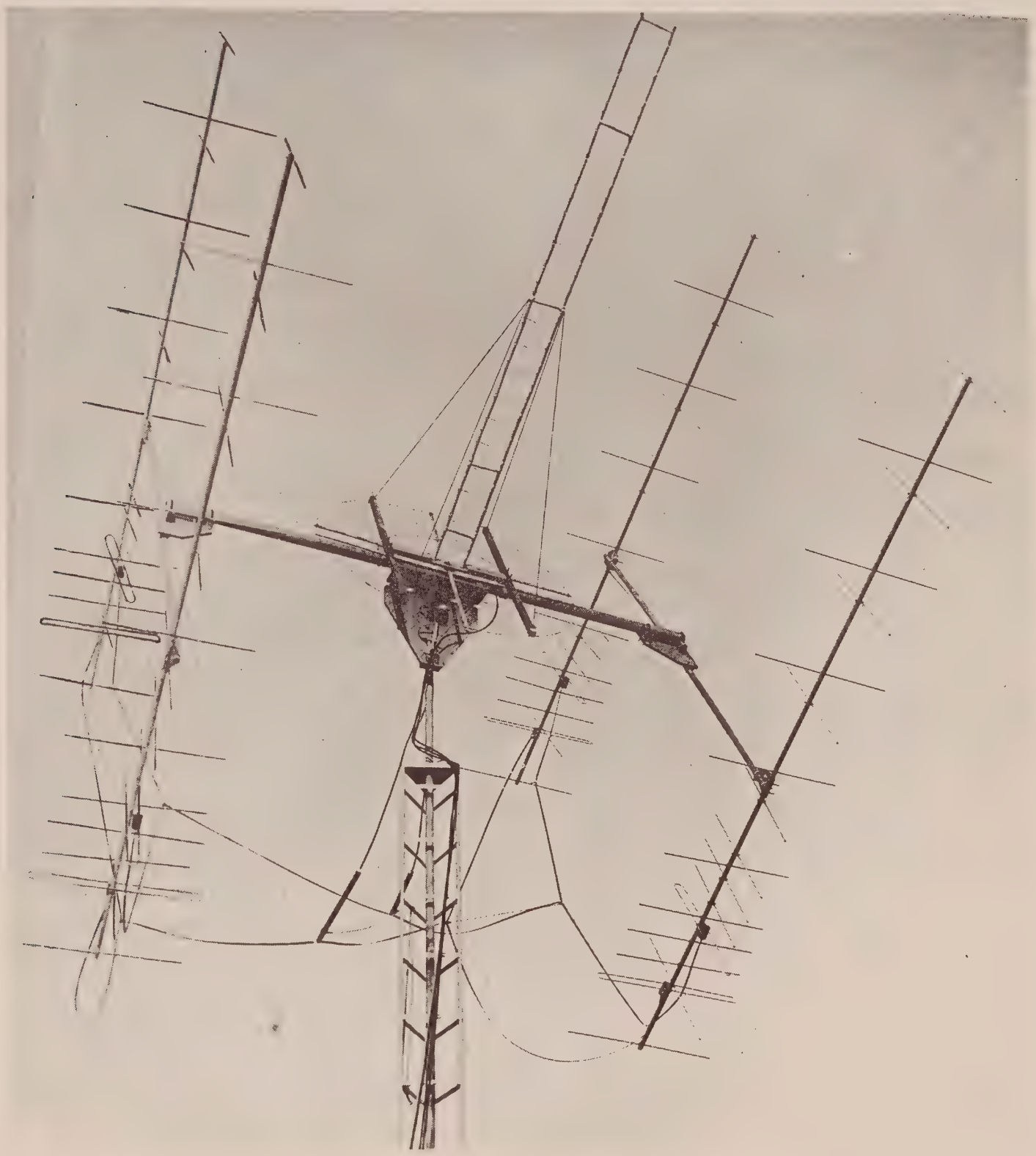

Moonbounce Newsletter

by Victor A. Michael, W3SDZ
Box 345, Milton, Penna.

Living on a mountain has many advantages to offer a VHFER like your writer, but it also has some disadvantages. One of these is the ten-foot snow drifts in the field behind the house and on the roads leading to this mountain paradise. Needless to say, all outdoor work has bogged down here at W3SDZ. I also received a letter from K2UYH, and his group doesn't expect to be operational for schedules again until March. Al has been busy with exams, and he wants to make some system improvements before more tests are made. Their initial tests using the sixty foot dish (at a military installation) were not successful at working anyone. This was due in part to lack of people on the other end, and partly due to some bugs in the system.

Last weekend I went on a visit to W2CCY. While there, we had a small get-together with W7PUA/2 and W2IMU. We did a great deal of measuring on various front ends for 432 and Cliff gave me the inside information on how he designed, built and matched his quad yagi array that has produced EME contacts with KP4BPZ twice and WA6LET. It is a very effective array that is easy to build and can be duplicated by the average worker. Cliff plans to expand the array to try for his own echoes this summer. (Ed. note: Constructional details of this antenna were submitted but are not yet ready for printing. See next issue of VHFER.)

I'd like to tell you about the results of our front-end measurement work. Without going into a lot of detail, we found that the new Texas Instrument transistor TIX-MO5 is real good news for 432 operators. A two-stage amplifier in front of a mixer using the same transistor will produce a 2.9 db system noise figure. The best system noise figure obtained with various other transistors including the 2N3478 was 4.5 db. Now you would expect that a transistor this good would be expensive, but it sells presently for just 52¢. While a 2.9 db system (276 degrees) is good, a good high-gain antenna on 432 is quiet enough to be using a front end in the .7 db (50 degree) category. This still means you have to consider a paramp, but the low-noise transistor front end means it is now feasible to build a stable paramp without using a circulator. The gain required by the paramp is now less than ten db to get the noise figure of the paramp to take over the system noise figure. With a 6 or 8 db front end, it requires a paramp with gain on the order of 15 db which requires a circulator. or a difficult-to-build bridge=type circuit. In most cases, mounting one of these preamps at the antenna to overcome feedline loss will outperform a paramp at the shack end of the coax. One additional note at this point concerning protection of transistors. The only problem we have experienced with transistor burnout has been due to the sequence in which the antenna relay is switched in relation to the transmitter output. We are using ordinary Dow Key type relays with the isolation button in the receiver side of the relay. If you have any transmitter power at the relay while it is switching you will blow a transistor. The relay must close before transmitter power is turned on---then the transmitter power must be off before the relay switches to receive. No other protection has been found necessary, and I run 600 watts of RF through the relay. I won't take the space in the column to completely describe the system, but if you can't figure out your own scheme for sequencing, drop me a note. End.

OPEN BANDS

by Marilyn Wiseman, K8ALO

Reports were up compared to December. Lots of bad weather kept us in our shacks thru-out the country (including me!) I'm sure glad spring is just around the corner. This means a chance of an opening or two. Keep your ears open, as one might be surprised. Looking forward to your report. My address: Box 103, Petersburg, Ohio 44454.

50 Mc. Meteor and Ionospheric Scatter--not band openings

Jan 1 K7ICW (Nev.) wrkd W7CNK (Wash.) 0808. Wrkd stations in Mo., Kans. also. Hrd stations in N. Mex., Texas, Okla., Neb 2000-2230.

Jan. 2 WB6GKK (Calif.) wrkd W7CNK 1116.

Jan. 7 K9HMB (Ill.) wrkd K2QWD, K2YCO (N.Y.), K1VFY, W1ELP (Mass.), K1IKN (R.I.), W4YEB (Va.), W3LUK/3 (Md.) K7ICW (Nev.) wrkd KØRNV, WØKMV, WØDPN, WAØBPC (Mo.) 0830-0845.

Jan. 9 K7ICW (Nev.) wrkd WØEYE (Colo) 0732-0805. K9HMB (Ill.) wrkd W5SFW (Tex.), W5OJM (N. Mex.) WB6GKK (Calif.) wrkd K7BBO (Wash), WA6RDX 0800-0847.

Jan. 15 WB6GKK (Calif.) wrkd WA6SQI, K6RIL 1144-1231. K7ICW wrkd K6GJD, W6NLZ.

Jan. 16 K9HMB (Ill.) wrkd K1PBD, W1GKE (Mass), W2REB, K2EGH (N.J.), K1IKN (R.I.) K3IDM (Pa.) 0800-0930. WB6GKK (Calif.) wrkd K7BBO (Wash.), WØEYE (Colo.) 1044-1440.

Jan. 18 WB6GKK (Calif.) wrkd W5KCP (Texas) 0830.

Jan. 21 K9HMB (Ill.) wrkd W5UNY/5, WA5FJN, K5HVC.

Jan. 22 WB2MRK (New York) wrkd KØZNJ, WØFNK, WAØBPC , WA5NOB (Ark.), WA9AYK, WA9HNK, WA9OKN (Ind.) K9HMB (Ill) wrkd K1IKN, W4DPH, WA4WQC, WA4GDE, WA5NKY.

Jan. 23 K9HMB (Ill.) wrkd K1PBD (Mass.), K1IKN (R.I.), W2REB (N.J.). K7ICW hrd WA5BGT (Okla.) 1146.

Jan. 26 K7ICW (Nev.) wrkd W5AQS, W5SFW (Tex.) 1810-1914.

Jan. 29 WB6GKK (Calif.) wrkd K7BBO (Wash.) 0930. K9HMB (Ill.) wrkd K1PQY, K1IKN, WA2TJP, K1ACD, K3JAM/1 (Vt.) K2RRM.

Jan. 30 K9HMB (Ill.) wrkd K1ACD (Conn.) Wb6GKK wrkd K7BBO 1730.

Feb. 3 WB6NFT (Lodi, Calif.) wrkd K7ETQ (Ariz.) 650 mi., K7ZQI (Ariz) 670 mi, K6LSW 450 mi. 1925-2015.

K3QCQ (Lebanon, Penna.) reports the following stations heard sunday mornings. K9HMB, WA9OUU, K9DZU, W9CIU, K8MMM, K8UQA, K1PBD, K1ACD, W1LKI. Bill also keeps successful scatter skeds on c.w. with WA9DUU, K1OYB, K1ABR.

K7ICW (Nev.) reports receiving the 49.8 Mc. signal transmitted from Stanford Univ. on Sun. mornings. Transmissions from Stanford's 150 foot dish are near 49.8 and 423.3 Mc. Operating times approx 0900 PST-2100 PST. LOTS of power.

K1ABR (Cranston, R.I.) reports successful skeds with K3QCQ Sat. & Sun. mornings. Dick says that anyone interested in 6 meter east-west scatter skeds with Rhode Island can be accommodated. He's on every Sat and Sun A.M. beginning at 0700 E.S.T. running 1 KW c.w., 6 elem. beam 74' high.

144 Mc.

Jan. 2 K7ICW (Nev.) wrkd K6JYO, W6YVO 0804-0818.

Jan. 3 K1ABR (Cranston, R.I.) wrkd W9WDD 800 mi. 0830. New state for W9WDD.

Jan. 16 K7ICW (Nev.) wrkd W6YVO, hrd W6NLZ 0810.

Feb. 9 W7JCU/4 (Montgomery, Ala.) wrkd W4TLV, W4MWF (Ala.), W5CKY (Miss.), K4HOX, W4UUF, K4UND, WA4HWS (Fla.) 2100-2303.

432 Mc.

Jan. 2 W8FWF (Garden City, Mich.) wrkd W3RUE (Belleveron, Pa.) 218 mi. 0020.

Jan. 4 W8FWF (Mich.) wrkd W9NTP (Ind.) 262 mi., W9BRN (Ind.), W9NAU (Ill.) 250 mi., WA9NKT (Ill.) 315 mi, W9OKB (Ill.)W9FHS (Ill.), WA9HUV (Ill.) 210 mi., K8REG (Ohio) 175 mi., K8TJP (Mich.) W3RUE (Pa.) 218 mi. George worked 5 states in one evening.

LET'S TALK ABOUT SCATTER
by Loren Parks, K7AAD

You may recall that we recently discontinued band openings on six in the OPEN BANDS column of the VHFER. The reason is that when the band is open, anyone with a peanut whistle for a transmitter and a wet noodle for an antenna can work a thousand miles or more. You just have to be on at the right time. Should we continuously give free publicity to those hams of little or no ability who stay glued to their receivers day in and day out to be ready when the opportune moments come? It didn't seem to me that this sort of reporting furthered the amateur radio art. Now we solicit only those reports which are not band openings of the E or F layer type. Aurora is OK--that's back scatter. Well, the January issue had a rather small variety of 50 Mc. calls in there and I implied that six meter hams east of the rockies were less than competent at c.w. Something happened. I am amazed at the listing in this issue. Maybe not all are scatter, thru misunderstanding. But most are scatter and any information to the contrary should be reported to me.

The purpose of the scatter listing is to show the uninformed that six is not as dead as you might think. In fact you can work better DX on six when the band is dead than on any other VHF band and probably do as well when six is dead as you can on two when its open. A lot of hams would find a new challenge by taking up 6-meter scatter. The scatter listing is meant to promote scatter and with this article I hope to show you some of the steps you take to get started.

Channel 2 has brought on lots of problems in many areas of the country. Locally, six meter activity is very slight. There used to be a couple of hundred stations active, now there are just a few. Complaints come from night-time viewers. Scatter is best during the early hours, and most work is done early Sat. and Sun. mornings. Who watches T.V. then? With Saturday cartoons on several channels, the kids can switch. Sunday is even less of a problem in most cases. One trick in minimizing TVI is to throw away the 8 Mc. rocks. A small amount of 7th harmonic energy from that oscillator can clobber channel two. Start out at 16.675 or so. Then the next harmonic will be up 17 Mc. from 50 and fairly well attenuated by the final and other tuned circuits, the antenna and the neighbor's TV set. It won't solve the overload problem but it may help a lot if the diagnosis was wrong. The Drake filter is reputed to be the best. That should clear up the rest. W6GDO in Sacramento (over a hundred miles north of Frisco) can watch Channel 2 in his shack from San Francisco while operating 1 Kw on six meters. It can be done.

There are two types of common scatter signals useful on six. One is the well-known reflection from meteor trails. These reflections may give you a ping or a short QSO. Usually they give pings and fairly long bursts that let you copy a call or part of a message. They are much more frequent and longer on six than on two meters. Then there is the true ionospheric reflection---always there, but weak. Signals may hover in and out of the noise or be fairly readable. It takes a good antenna and high power--500 watts to 1 kw--to do a good job on ionospheric scatter. Most contacts are a combination of both. Sometimes the meteor pings are aggravating. They just disturb concentration on the weak, background signal. A true ionospheric scatter addict shuts down when there are too many meteors.

That's what I did before the horses got tangled up in the guy wires. Ionospheric signals are best in the spring and summer, worst in the dead of winter. The signals are tantalizing. It's not hard to tell they're in there, but getting the call is another thing. Then the two-way, and the report. That's the challenge. Not too many are up to it. When I first listened to scatter in about 1958 I could copy W7RDY in Everett, Washington (not far from Canada) chewing the fat with W6NLZ in Los Angeles. Those guys really had a circuit, and they weren't cheating on power. They just knew what they were doing. Week in and week out it was the same thing. There were ups and downs but they always made the grade as I remember. So it can be done and it is being done today to some extent by about 30 hams on the west coast. This issue of VHF ER shows it is being done in the east too. Maybe not true ionospheric scatter, but a combination of that and meteor scatter. A hundred watts may get you 500 miles or more. Think of how many sections you could pick up at contest time if you could work every section within 500 to 1,000 miles as we do out here. Those six meter multipliers are guarantees of a certificate when the band doesn't open during a contest.

Here's how you go about getting going and things you need to know:

1. Listen in the lower 30 or 40 kc. of the c.w. band from about 7:30 to 9 a.m. local time for north-south scatter. Listen earlier for signals from the east. Meteor scatter is better around sunrise but you don't need to get up that early. Catch the calls if you can. It takes a lot of tuning when activity is slow and signals are weak.

2. If you can hear signals then you have a good chance of working out. The more experienced hams use 2 1/2 minute calling sequences--timed to WWV. On the west coast, the southern stations use the first 2 1/2 minutes of each 5 minute period, the northern stations the second 2 1/2 minutes.

3. For ionospheric work, send very slowly with careful spacing. The receptor's mind has to decide many times whether your signal is on or off and slow speed and a steady rhythm help a lot. Meteor work is done at 15 wpm and higher.

4. For power of 100 watts or so, you'd better stick to meteors. 500 watts and up can go for the ionospheric scatter. In between you'll probably utilize a bit of the ionospheric returns and use the meteor trail enhancement to good advantage. There is often a residual after a burst, even a short one, that holds up the background signal for some time.

5. The two weakest links in most set-ups are the operator and the antenna. Copying signals in the noise is an art which takes practice and lots of imagination. Most antennas are pretty poor. Most converters are sick too, but nevertheless are adequate when compared to the antennas. Use RG 8/U coax line, not RG 58/U.

6. Experiment with receiver bandwidth. You may do better with a broad bandwidth than with a narrow one, especially if your receiver drifts or has a tuning backlash. Filters are nice in theory but can't hold a candle to the human ear when signals are in the noise.

7. If you're hearing good but not making a go of it, try arranging for a short sked--of say 15 minutes. Butter-up your prospective skedder with postcards telling him how well you're hearing him. Don't exaggerate too much because you may be called on to prove it. Tape recorders are popular items with scatter enthusiasts. Send a guy a short tape of his signals and others from his area and you make him indebted to you. Some people just cannot or will not write letters and you must call them some evening (for a buck) to set up a sked. If you make one, be sure you keep it. Don't make the long ones till you've proved your-

selt and your rig on the shorter ones like 200 miles or so. Save the thousand mile skeds for a time when you have a good chance of making a go of it.

8. For beginners a good rule may be to pick an unused frequency and stick on it. Scatter operators tune around. They can identify a signal by where it is. Crystal control is the easiest way to stay put. A signal that drifts is extremely hard to copy when signals are weak.

9. You don't have to have a high antenna to work scatter. I've worked lots of it at 20 feet. The antenna should be in the clear. As a rule, tilting does not help. Horizontal polarization is universally used as far as I know.

10. Sideband scatter is something you might consider. Its a lot of fun in the spring when there are lots of meteor bursts. Tuning is a problem though. You don't get many opportunities. When you get it right you want everything to stay right where it is. A little drift will put you out of business. On the west coast the frequency is about 50.110 at about 8 AM.

Well, this is about all I can give you from memory of several years of west coast scatter activity on 6. There are others more knowledgeable than I who may be persuaded to write later. Watch the Open Bands column for calls within your hearing range. Send reports of your successes and what you hear to Marilyn. I don't believe the dates are important, just calls and distances. End.

USING SURPLUS SLOTTED LINES

by Pete Bauer, W6DXJ*

Slotted lines have greater versatility than reflectometers since they permit measurement of impedance as well as standing wave ratio. By using a sensitive receiver on the sliding probe, impedance and SWR measurements may be made at signal levels in the microwatt region--far below that possible with an ordinary reflectometer.

Unfortunately, most of the slotted lines on the surplus market use non-standard input and output fittings that are not compatible with the type "N" fittings used by most UHF stations.

In general, two possible methods of mating the large diameter coax of the slotted line to the small diameter of a "N" fitting are available: a tapered section, or a step transition. This article will concentrate on the step transition, since it is easier to make, is smaller, and will work at lower frequencies than the tapered section.

Fig. 1 shows a step transition for mating large diameter coax to small diameter coax of the same characteristic impedance. If the gap between the end of the larger center conductor and the step is one ninth the diameter of the larger outer conductor, as shown, no reflection will take place at the step.**

Figs. 2 and 3 show how the TS130 slotted line was modified for "N" fittings. A type UG 58/U connector was used in conjunction with the original shorting cap that came with the line. The flange on the UG 58/U was turned down so that it could be soldered into an appropriate size hole drilled in the shorting cap. The 5/8 inch diameter inner conductor of the TS 130 was shortened so that a gap of D/9 existed between it and the cap. A short piece of 1/8 inch diameter rod joins the center conductor to the center pin of the connector (fig. 3.)

A similar technique was used on the TS58 slotted line. The TS130 has a characteristic impedance of 52.5 ohms and the TS 58A is 51.5 ohms. A 50-ohm matched load showed an SWR well under 1.1 at both 432 and 1296 Mc. with either line.

The transition at the input, or generator, end of the line will not affect SWR; only the output transition must be reflection-free for accurate measurements. It is, however, desirable to have a good transition at both ends so that the line can be used "in either direction."

*6445 50th San Diego, Calif.

** Some authorities prefer D/8. In this case D/9 worked so well D/8 was not tried.

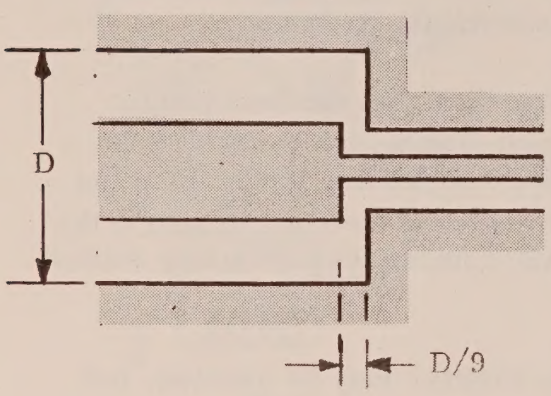

Fig. 1. A reflectionless step transition from large diameter to smaller diameter coax.

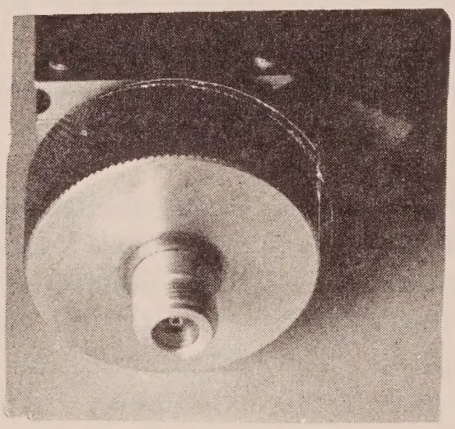

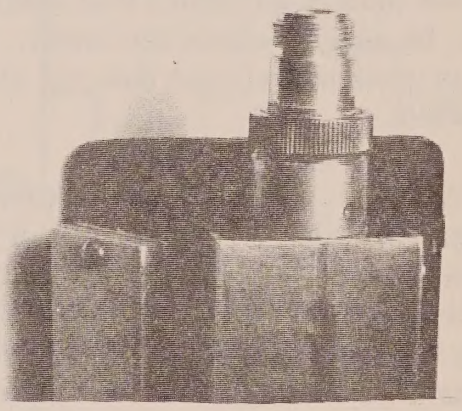

Figures 2 & 3. Modification of the TS-130 slotted line for use with an "N" fitting.

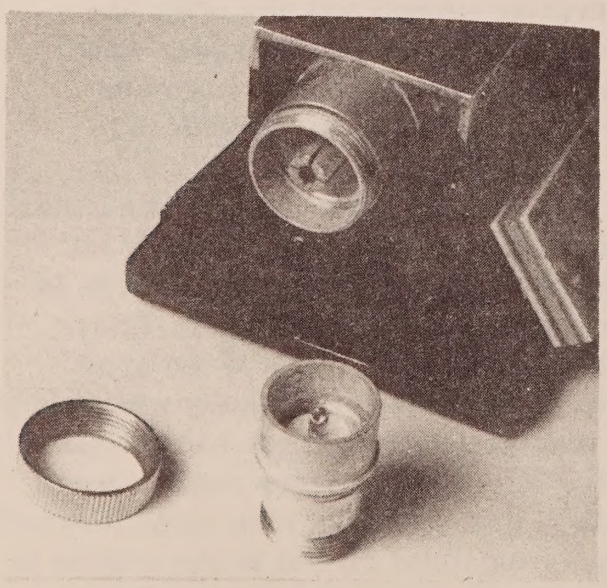

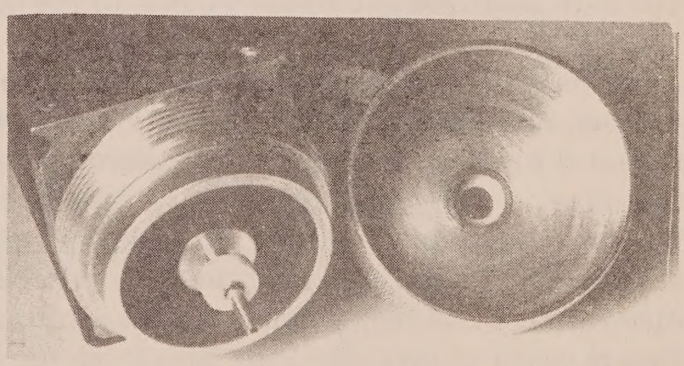

Figures 4 & 5. A step transition modification of the TS-58 surplus slotted line for use with "N" fittings.

A LOW-NOISE TRANSISTORIZED MIXER FOR TWO METERS

by John B. Dillon, WA6EWV*

The origin of the following circuit is not known. It was shown to me by W6TFS and neither of us knows of its being published or being well recognized. It is believed to be worthy of serious consideration in the construction of low-noise two meter equipment.

The mixer transistor must be of good quality and in good condition. Typically a 2N2369 has been used. An RCA 2N3478 ($1.90) or G.E. 2N3663 (98¢) may be used. In fact, the G.E. 2N3663 can be used throughout.

The base and collector circuits are resonated at two meters and the I.F. frequency respectively. The collector voltage is zener-controlled at 9 volts. This may not be necessary but it saves an occasional blowout when different transistors are tried.

The emitter circuit is unusual but easy to adjust. It is important that the lead lengths be short. This method uses copper-clad board with "lands" cut out with a dentist's drill. If this is not used, the lead to the emitter should not be any longer than the lead from the socket. The socket is not necessary, but it makes transistor comparisons easy. The tank is very low "L" and high "C". An Arco 423 compression trimmer works very well.

The oscillator circuit is standard. The small choke in the emitter may be omitted, but if it is the bypass condenser must also be eliminated. The emitter resistor may vary some, but most transistors will start very easily with the value shown. If a G.E. 2N3663 is used, be sure to check the leads. They are different than you might expect. The multiplier is conventional and puts out plenty of drive. All multiplier coils are self-supporting of #18 wire.

ADJUSTMENT: After coils are dipped, shorts are cleared and the local oscillator is working, the mixer collector circuit is adjusted. It is wise to do preliminary oscillator adjustments with the mixer transistor out of the circuit. The collector current of the mixer transistor is adjusted with a milliammeter in the collector circuit. The mixer is literally "turned on" by the r.f. drive from the multiplier. The emitter tank and the r.f. drive circuits are adjusted until between 0.7 and 1.0 mils of mixer collector current is secured. This adjustment should be made with the antenna connected or with a 50-ohm load resistor connected in place of the antenna.

This mixer circuit constitutes a very satisfactory converter without any amplifier for local work. It is a wonderful little device to compare transistors and to compare amplifier units. It may be made quite small, but using reasonable construction techniques and with care in the emitter circuit of the mixer, no difficulty should be encountered.

Editor's Note:A converter which works well at one I.F. may not be satisfactory at another without some modification. I would anticipate more difficulty with stability at a low I.F. than at a high one because of the nearness in frequency of the base and emitter circuits in the mixer. The tuned circuits are separated in frequency by going to a high I.F. (lower injection frequency) and also the emitter sees a lower impedance to ground at the signal frequency--a desirable situation. An alternative to be tried in case of difficulty with a different I.F. is tapping down on the emitter coil for emitter injection, if you can get sufficient drive to give you good gain from the mixer. The silicon transistors require more voltage drive in such circuits as this where the base is at d.c. ground. With some forward bias, drive requirements are reduced. The advantage of the tuned circuit in the emitter is that injection of harmonics from the multiplier is minimized. These harmonics can cause unwanted spurious responses in the tuning range for two meters because other signals outside the two-meter band beat with these harmonics and come out at the I.F. frequency. LP

For parts list and coil data
see back cover

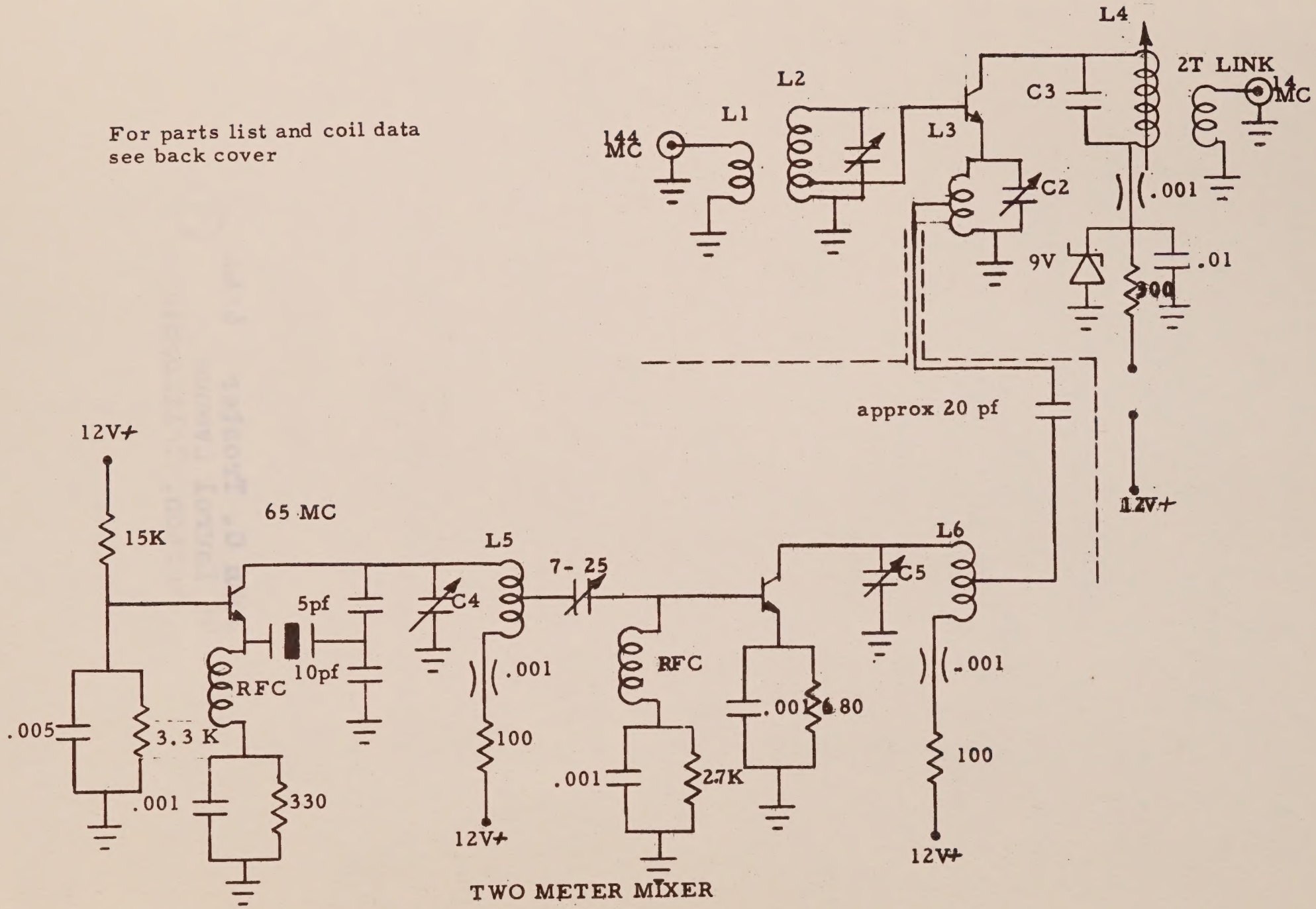

TWO METER MIXER
Fig. 1

Parts List---Two meter mixer

L 1 2 turns #20 hook-up wire wound between turns of L2 at base.
L 2 5 turns #18 tinned 1/4" dia. 3/4" long. (L 1 may be eliminated by tap if desired.)
L 3 3 turns #20 tinned 1/8" dia. by 1/4" long taped at center.
L 4 Resonate with C3. to I.F. Transistor in.
L 5 5 turns #18 tinned 1/4" dia. by 5/8". Tap 1 turn.
L 6 3 turns #18 tinned 1/4" dia. by 1/2". Tap 1 turn.
C 1 1-10 pf. trimmer.
C 2 Arco 423 or equiv.
C 3 60 pf. (24 pf. fixed with 1-40 pf. trimmer. (JFD MC604). Any combination that will give dip at xtal freq. Varies with transistor type.
C 4 1-20 trimmer
rfc 25 turns #30 on 1/2 w. high value resistor or 1/8" form. Not critical.

socket connections

2N3663
Bottom View

Bypassing is conventional for the frequency. Button stand-off capacitors are nice for the collector coils but feed-thru types were used. Shield the oscillator from the mixer. All resistors were 1/4 watt but 1/2 watt is OK.

METEOR SCATTER SKEDS WANTED on 2 meters with Wyoming, Idaho, Colo., N.D., S.D., Kans., Ark. & Okla. Bill Conkel, W6DNG 4608 La Cara, Long Beach, Calif.

CIRCULATORS for ham bands of 432, 1296 and 2300 Mc (50 ohms) will be made on receipt of your order (with payment). Write MELABS, 3300 Hillview Ave., Palo Alto, Calif. Min. isolation port 2 to 1 or 3 to 2, 20 db. Price is under $100. Deliv. 3 to 4 weeks.

Published by Parks Electronics Lab.
Route 2, Box 35
Beaverton, Ore. 97005

John G. Troster 6-66
45 Laurel Avenue
Atherton, California
4

Return Requested